09.00192.001 | 23/11/09
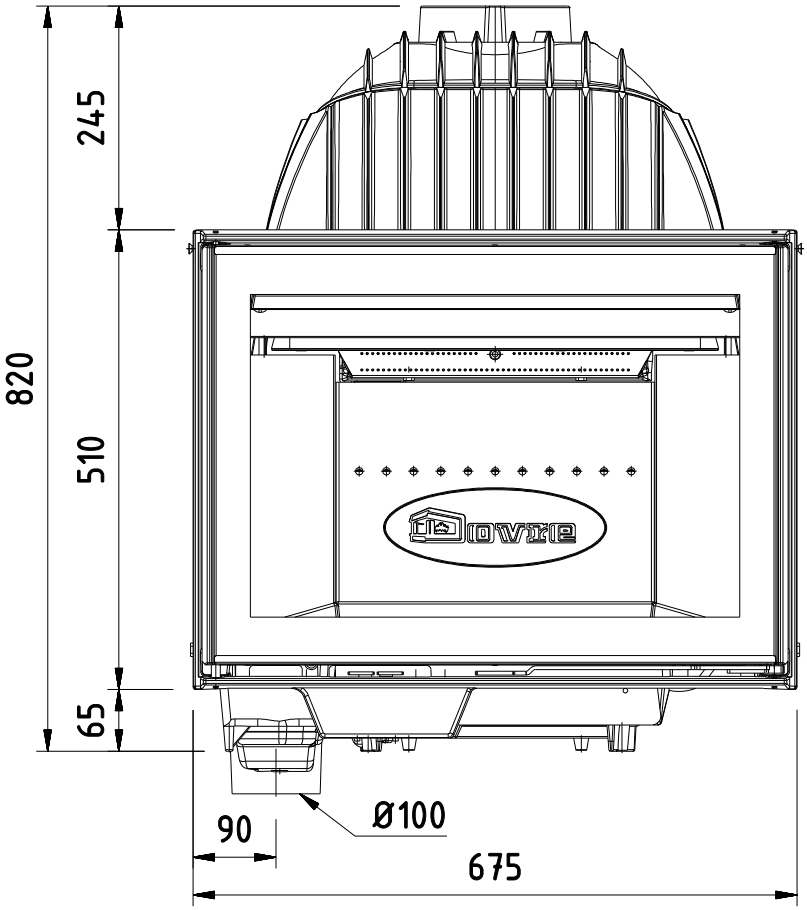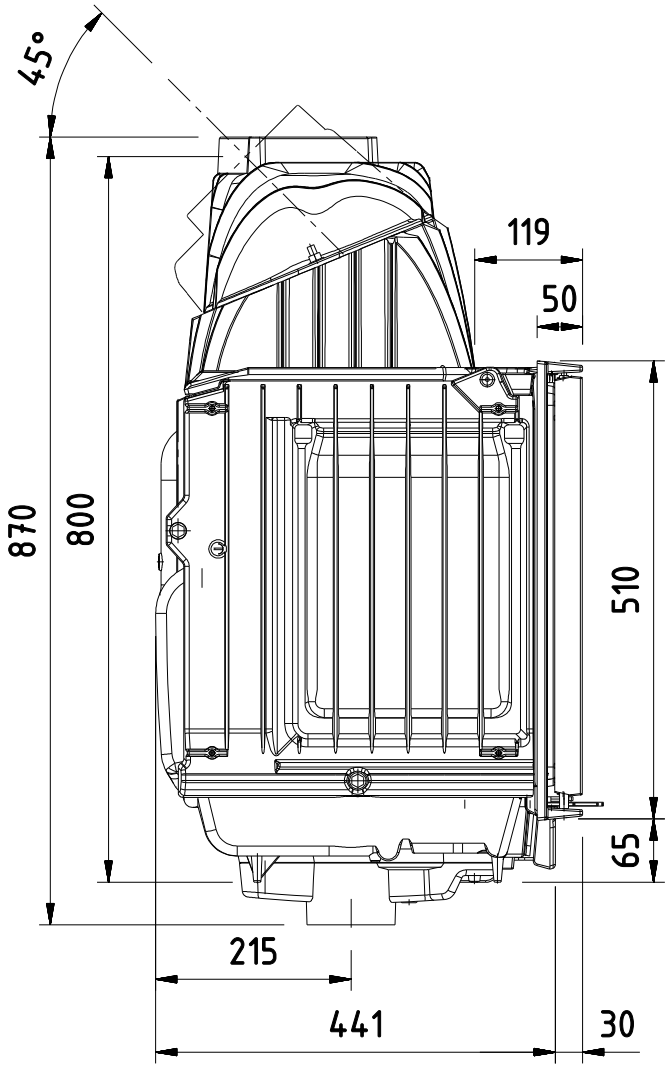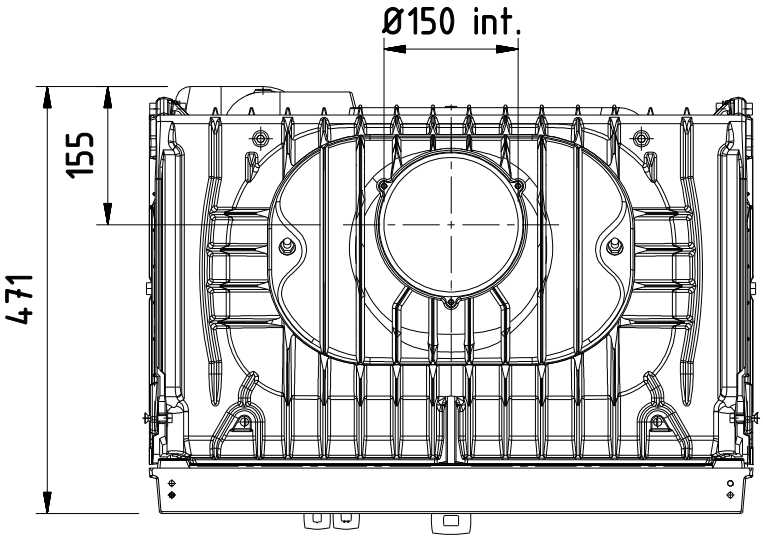
2175 CB S